SC 30T

Scanjet tank cleaning equipment

KEY FEATURES

+ Programmable
+ Magnetic drive
+ Section cleaning
+ Rugged construction
+ External drive
+ Easy maintenance
+ High jet impact
+ Easy installation
+ Adjustable speed

The SC 30T is a single nozzle mechanically programmable automated tank cleaning machine constructed of 316 stainless steel and other highly corrosion resistant materials.

The SC 30T allows the operator to wash the tank in a full 360° mode or to set the nozzle angle to wash the tank within a particular section. The SC 30T also employs a patented magnetic drive transmission thus reducing the need for costly seal replacements and potential failures when used in hazardous environments. As the drive mechanism and other major components are external to the tank, this results in easy maintenance and a high level of safety when the cleaning of hazardous products are required.

The SC 30T is the product of choice when long jet-lenghts and/or a high level of jet impact is required.

SC30T_TCT_2016_01_14

Quality Standards

The SC 30T is produced in accordance with ISO 9001 Quality Standards and our certificate of conformity and accreditation is available on request. Additionally, the SC 30T conforms to United States ASME standards for construction and others... available upon request.

Typical applications for the SC 30T:

+ Ethanol fermenters
+ Crude oil storage tanks
+ High density stock chest
+ Large silos and dryers
+ Road tankers and railcars
+ Reactors
+ Large Uni-Tanks

Distributed and Serviced by...
Tank Cleaning Technologies, Inc.
15200 Middlebrook Drive; Suite E
Houston, Texas 77058 - USA
Phone: +1 281.480.4041
Fax: +1 713 516.5883
Email: sales@tankcleantech.com

www.tankcleantech.com

Stocking Locations in USA, Canada and Mexico

Technical performance

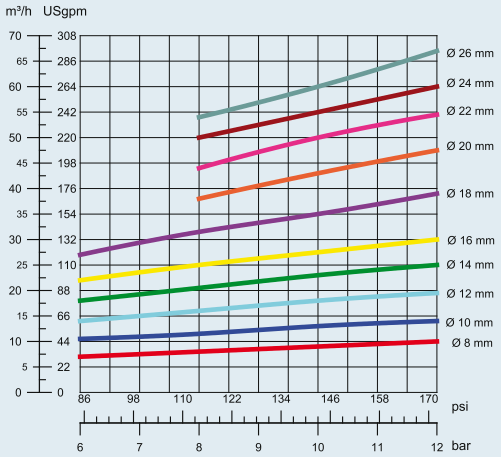

Pressure/Flow

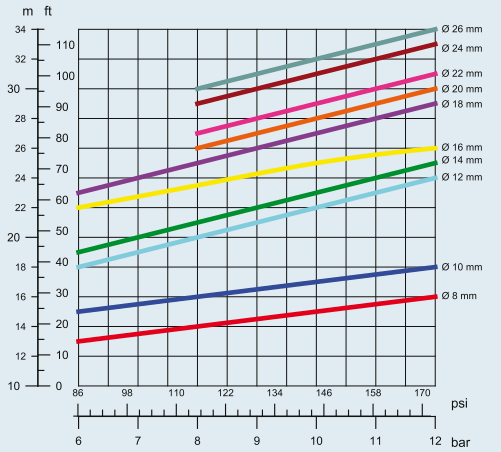

Jet length

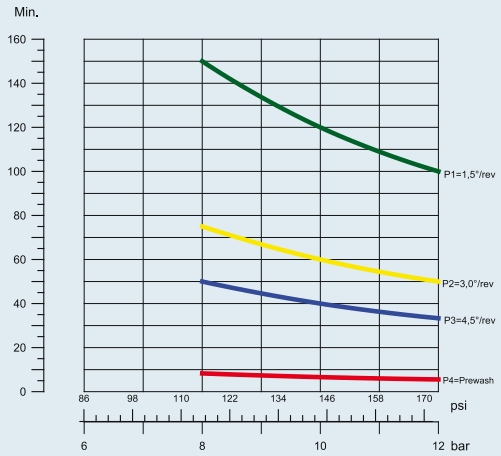

Pattern time

Dimensions

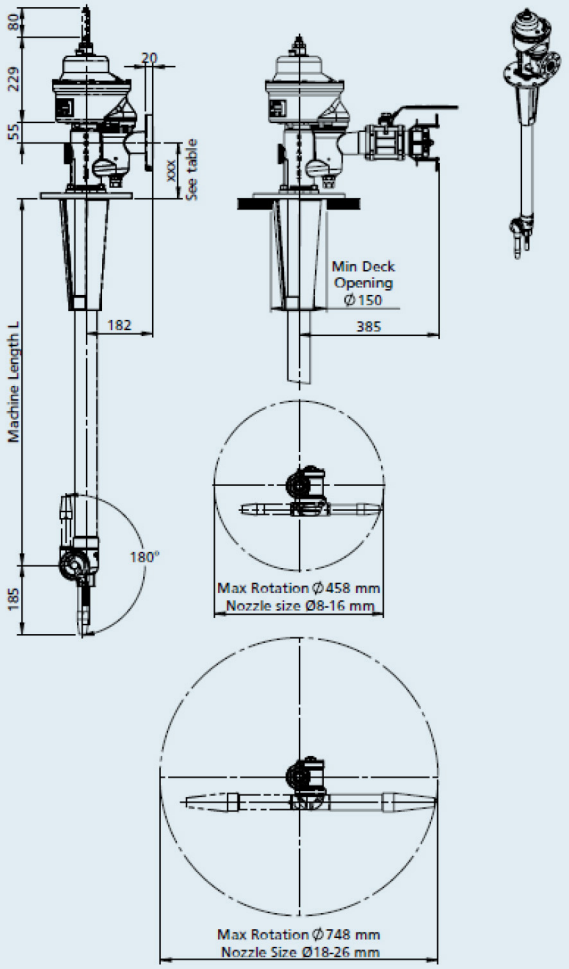

Specifications

Flow	5-70 m³/h
Inlet pressure	6-12 bar
Max pressure	14 bar
Recommended pressure	8 bar
Max temperature	95°C
Rotation speed	1-1,6 rpm
Standard length	1500 mm
Weight	43 kg
Per additional meter of main pipe	10 kg
Tank connection	PN16 DN150
Inlet connection	PN16 DN50
Materials	AISI 316, PTFE, Viton
Lubrication	Cleaning Media

SC30T_TCT_2016_01_14

Distributed and Serviced by...
Tank Cleaning Technologies, Inc.
15200 Middlebrook Drive; Suite E
Houston, Texas 77058 - USA
Phone: +1 281.480.4041
Fax: +1 713 516.5883
Email: sales@tankcleantech.com

www.tankcleantech.com

Stocking Locations in USA, Canada and Mexico

We reserve the right to changes without prior notice. Issue 01 - 2011